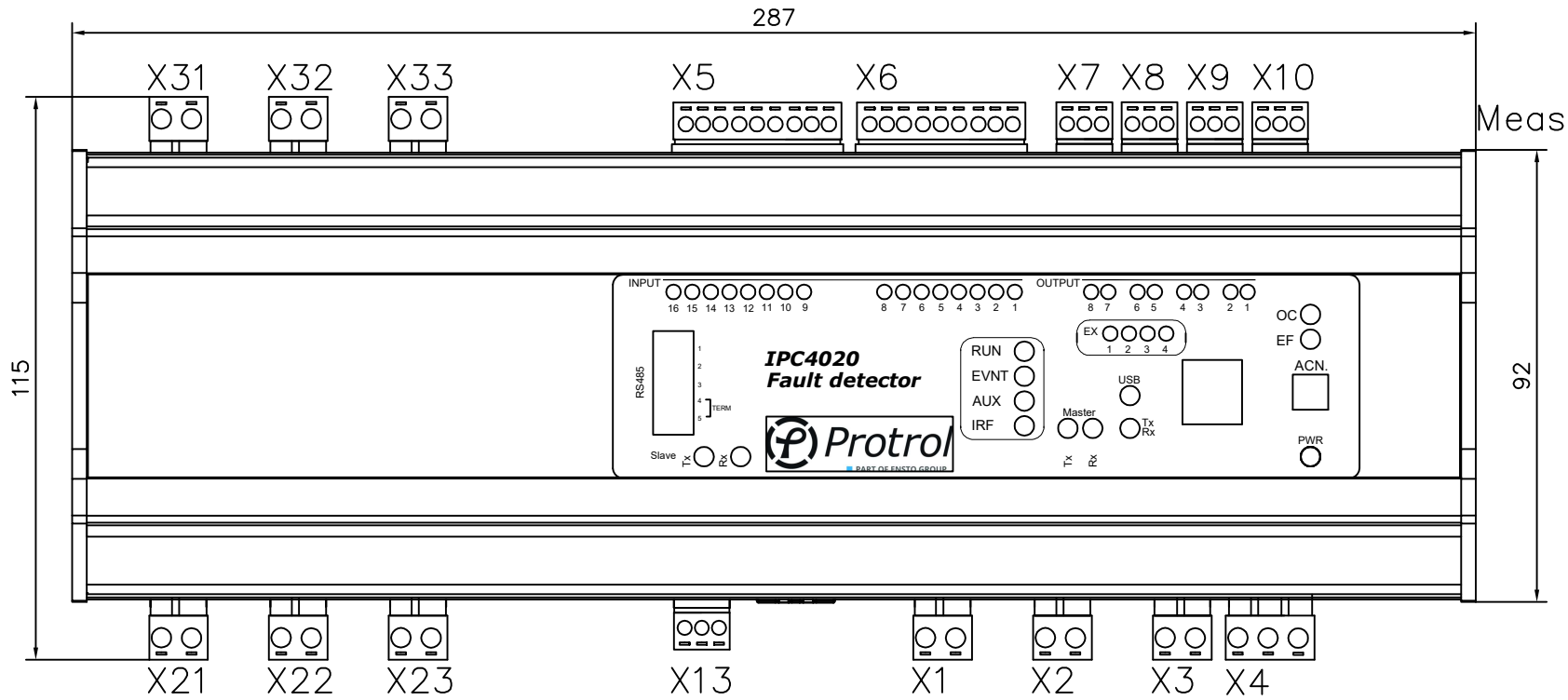

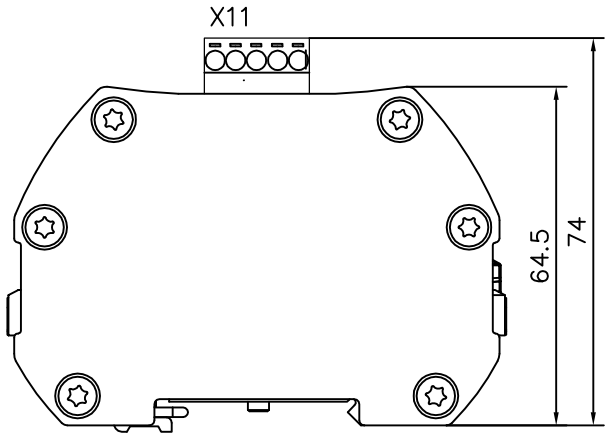

We reserve all rights in this document and the information contained therein. Reproduction, use or disclosure to third parties without express authority is strictly forbidden.

IPC4020exp3-LO-001_0001.dwg

STANDARD DRAWING

Rev	Revision	Sign.	Date

IPC4020exp3 – Fault detector
for overcurrent and earth fault
with integrated Remote Terminal Unit/RTU

Design checked by T.K	Scale	LAYOUT IPC4020exp3	Rev Ind 1
Drawn by BoA	Date 2020-02-20	Article no: 101143	Sheet 1
Ensto Protrol AB		IPC4020exp3-LO-001	Sheet/Cont –

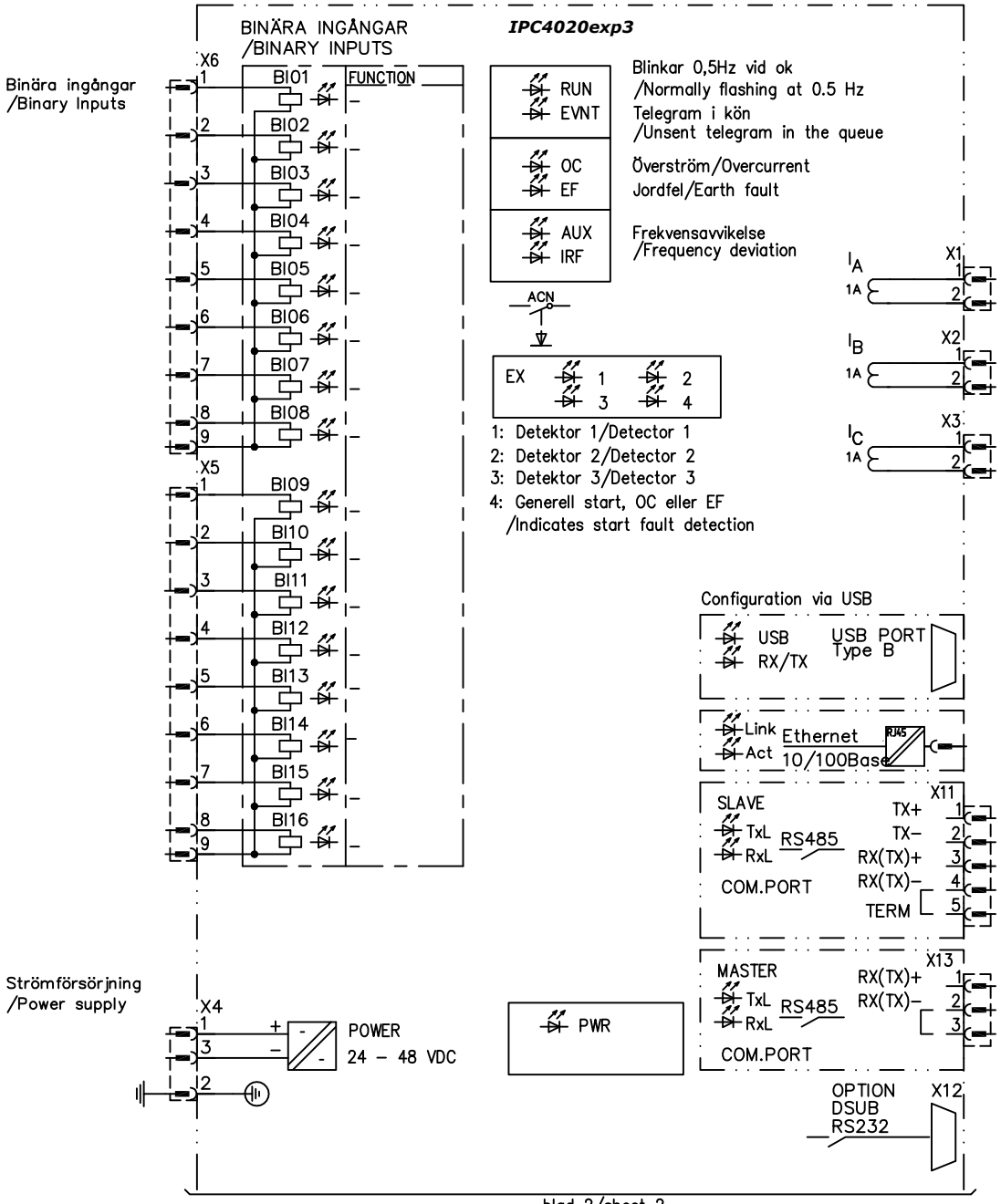

*) Option

STANDARD DRAWING

Rev	Revision	Sign.	Date
2	Rev.	BoA	220810
1	Rev. CT, 1A o C, terminal marking	BoA	200601

IPC4020exp3 – Fault detector
for overcurrent and earth fault
with integrated remote terminal unit/RTU

Design checked by: T.K
Drawn by: BoA
Scale:
Date: 2020–02–20

Ensto Protrol AB

CIRCUIT DIAGRAM
IPC4020exp3
Article no: 101143

IPC4020exp3–CD–001

Rev Ind: 2
Sheet: 1
Sheet/Cont: 2

We reserve all rights in this document and the information contained therein. Reproduction, use or disclosure to third parties without express authority is strictly forbidden.

IPC4020exp3–CD–001_0001.dwg

blad 1/sheet 1

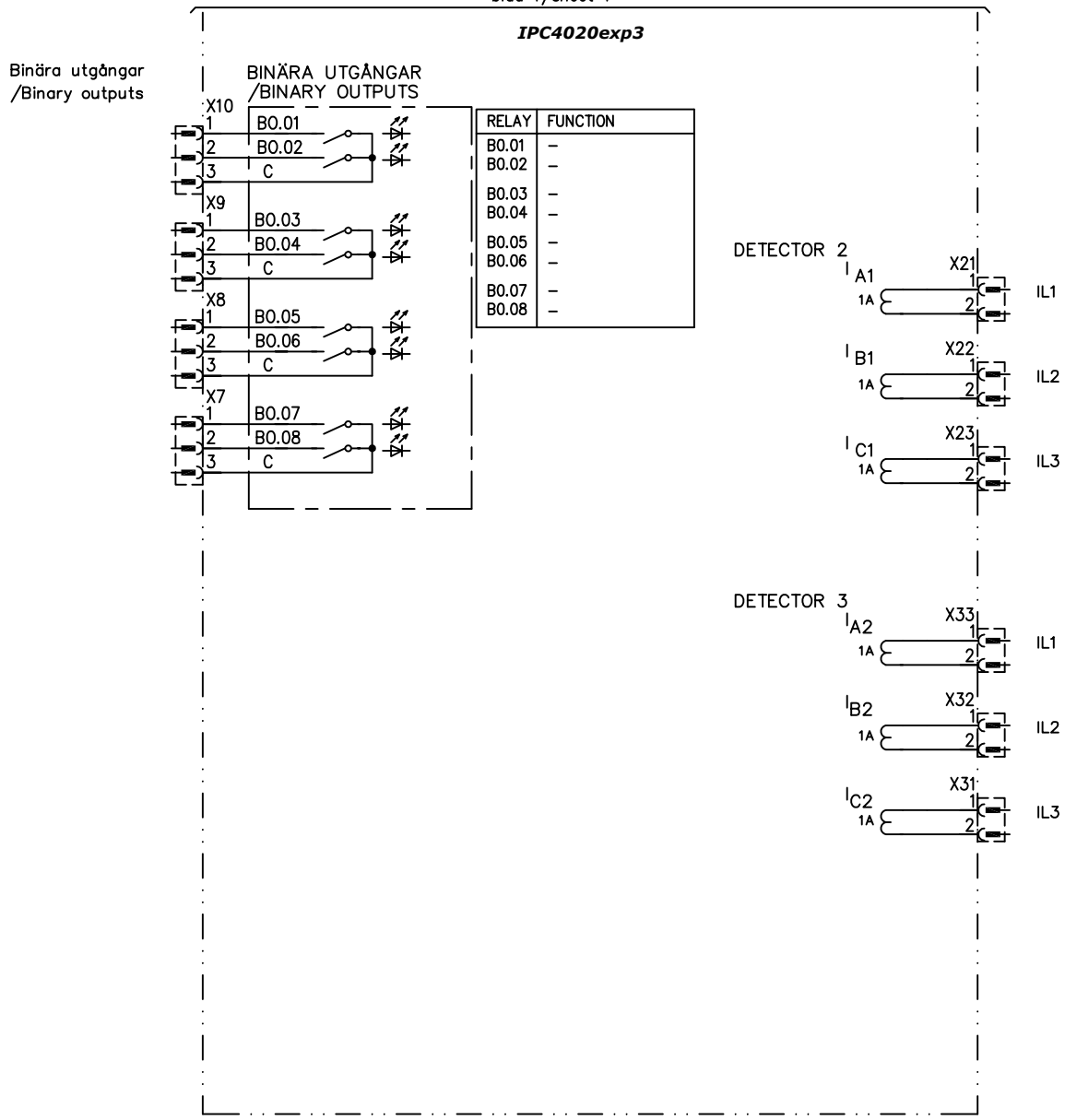

RELAY	FUNCTION
B0.01	–
B0.02	–
B0.03	–
B0.04	–
B0.05	–
B0.06	–
B0.07	–
B0.08	–

We reserve all rights in this document and the information contained therein. Reproduction, use or disclosure to third parties without express authority is strictly forbidden.

IPC4020exp3–CD–001_0002.dwg

STANDARD DRAWING

Rev	Revision	Sign.	Date
2	Rev.	BoA	220815
1	Rev. CT, 1A o C, terminal marking	BoA	200601

IPC4020exp3 – Fault detector
for overcurrent and earth fault
with integrated remote terminal unit/RTU

Design checked by: T.K
Drawn by: BoA
Scale:
Date: 2020–02–20

Ensto Protrol AB

CIRCUIT DIAGRAM
IPC4020exp3
Article no: 101143

IPC4020exp3–CD–001

Rev Ind: 2
Sheet: 2
Sheet/Cont: --